[3] COMET 1 - Power Board

LDOs will possibly need heatsinks

Should test their thermal performance

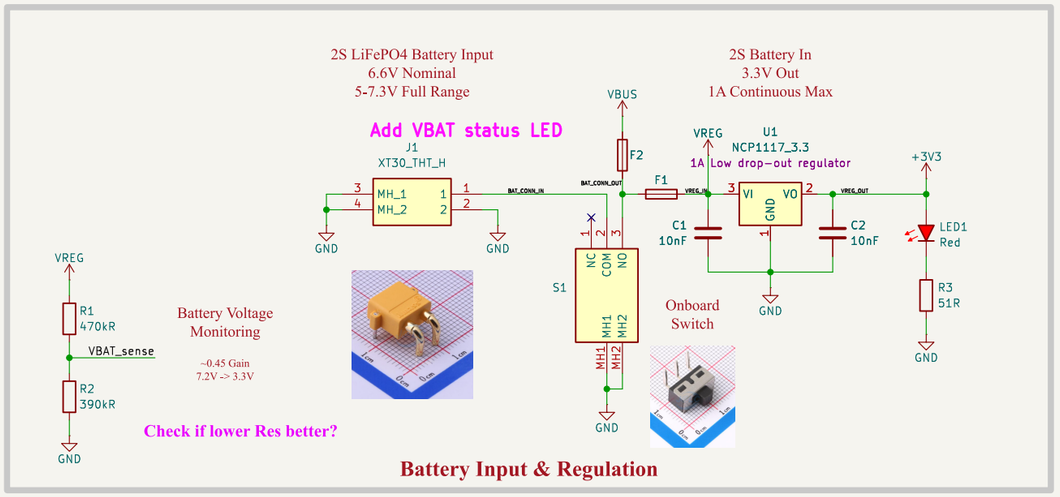

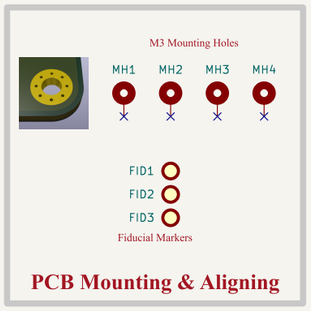

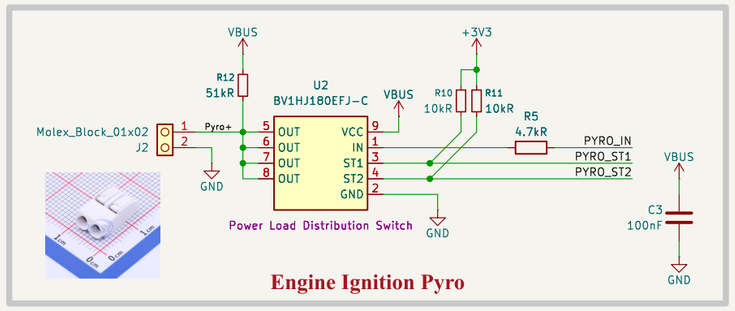

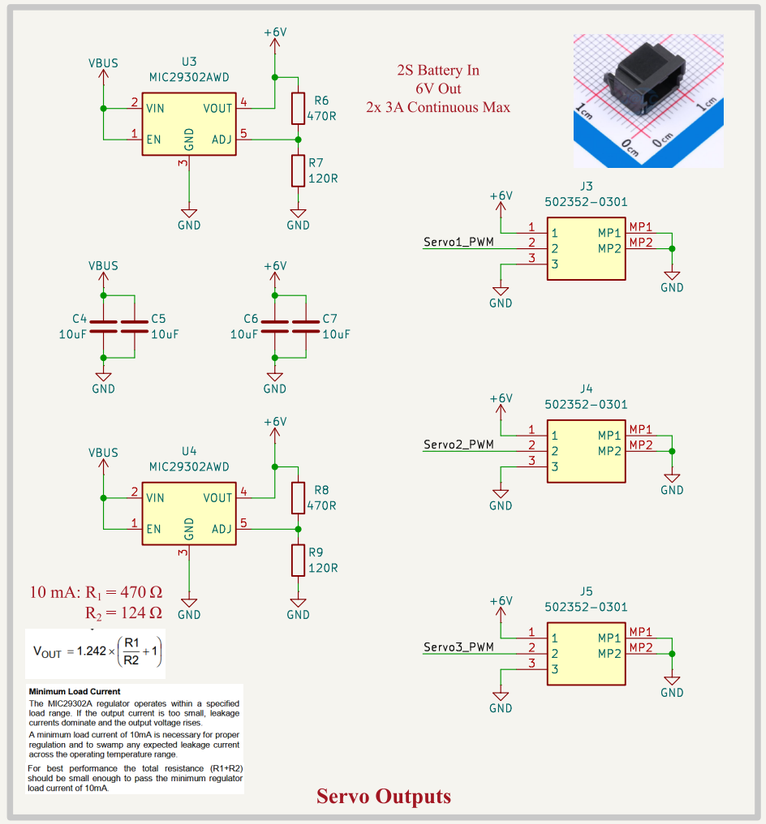

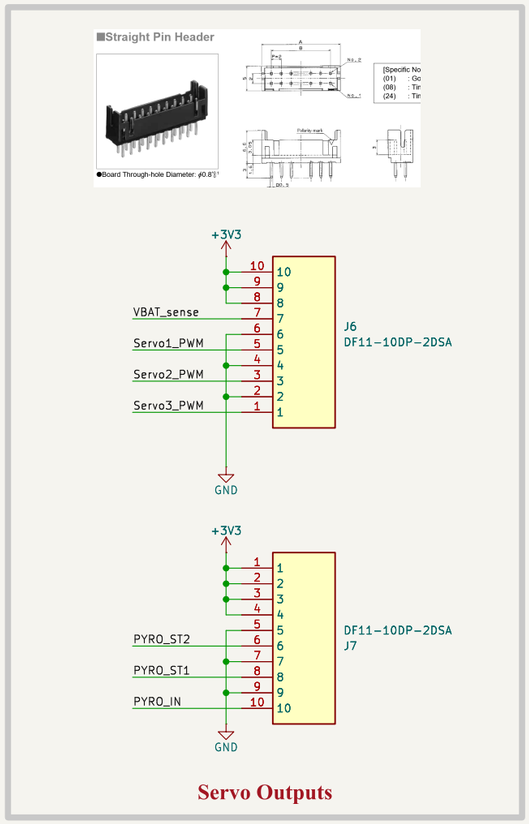

Comments:	Company: Southampton University Spaceflight Society		Variant: PRELIMINARY	
	Board Name: **Power Board**		Project Name: **SULRE - COMET 1**	
Sheet Title: COMET 1 - Power Board	File Name: PowerBoard.kicad_sch	Designer: Ethan Wilson - ew8g21	Date: 2025-12-23	Revision: V1
Sheet Path: /Power Board Schematic/		Reviewer: TBD	Size: A3	Sheet: 3 of 4